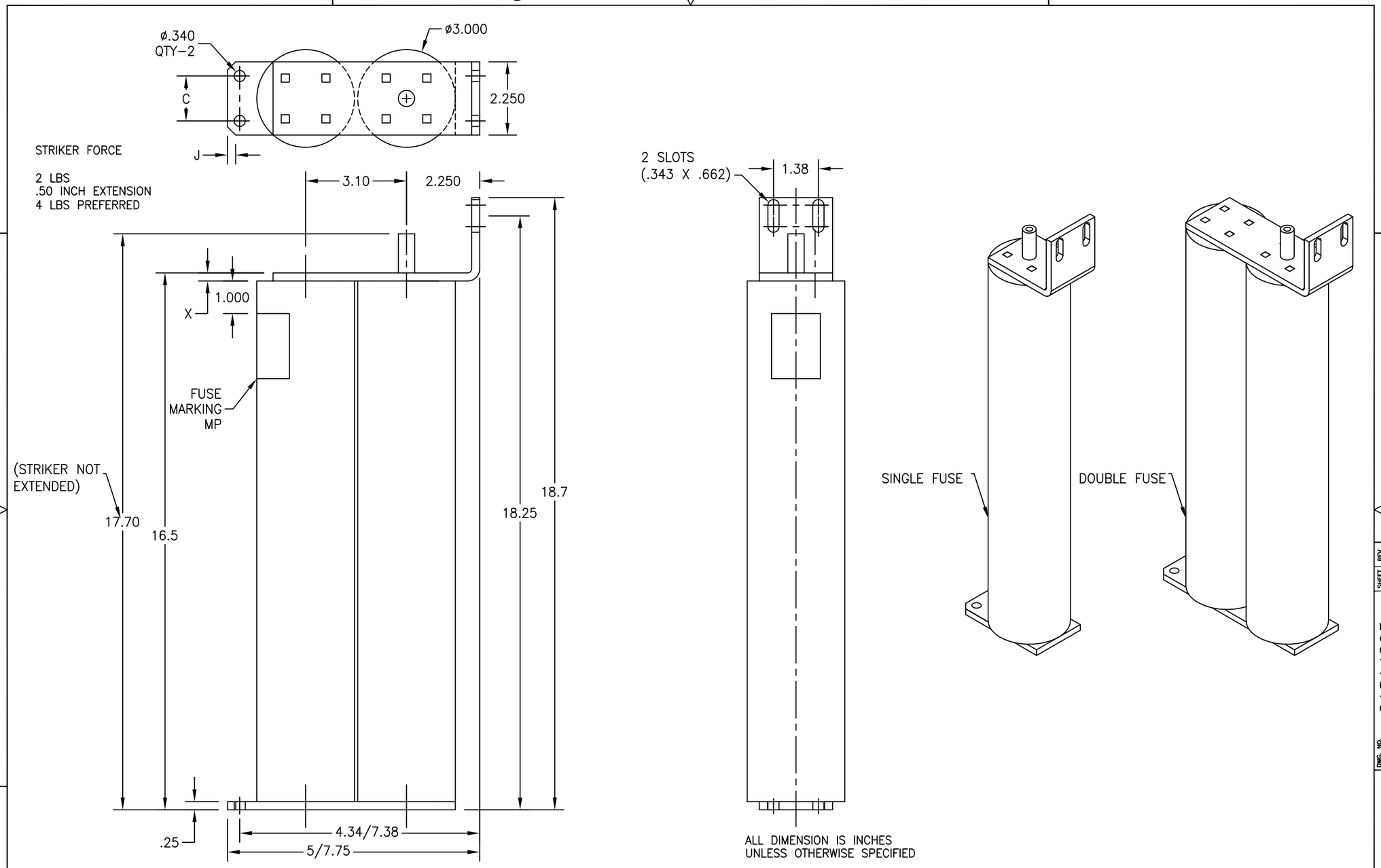


| | | | | | |
|---|---|---|---|---|---|
| REVISION | 1 | UNLESS OTHERWISE SPECIFIED<br>DIMENSIONS IN INCHES<br>TWO PLACE DEC. ±.02<br>THREE PLACE DEC ±.010<br>ANGLES ±1°<br>ONE PLACE MM ±0.5<br>TWO PLACE MM ±0.25<br>VOLTAGE ±5%<br>RESISTANCE ±10%<br>AMPERAGE ±2%<br>FORCE ±10%<br>TORQUE ±10%<br>SPEED ±10%<br>TIME ±1%<br>TEMPERATURE ±3°C ±5°F | DFTR. WOB<br>DATE 1/19/11<br>APPD.<br>DATE<br>APPD.<br>DATE<br>ENG. REF.<br>NEXT ASSY.<br>TOOL REF.<br>DSPEC. | TITLE LIMITAMP<br>MOTOR STARTING<br>FUSE–5.08 KV | | |
| IT. | | * STATISTICAL SAMPLING DIMENSION [0] | | SIZE C<br>CAD DIRECTORY<br>DWG. NO. 218A4293 | |
| | | | | SCALE NTS<br>PARTS LIST<br>PRODUCT CODE<br>SHEET NO. 1 OF 2 | |

DWG. NO. 218A4293 SHEET 1 REV. 1