PART NO	MODEL NO 9F60	TYPE	SIZE	MAX DESIGN VOLTS	CLIP SPCG	"A"	"B"	"C"	"D"	"E"	"F"	FIG NO
24	BBB	EJ–1	B	2750	6.00	7.38	1.56	1.31	1.62	1.31	1.44	101
	BBD			5500								
	BBL			2750								
	BBN			5500								
25	BDB			2750	8.12	9.50						
	BDD			5500								
	BDE			8250								
	BDL			2750								
	BDN			5500								
	BDP			8250								
26	BHH			15500	11.50	12.88						
	BHR											
			C				2.00	1.86	2.20	2.11	2.20	102
07	CCB			2750	7.00	9.18						
37	CCL											
41	CEB				9.00	11.18						
08	CED			5500								
42	CEN											
		EJO–1										
13	DNJ			25800	21.00	23.18						
			D				3.00	2.85	3.25	2.75	3.12	
27	FNJ			25800	21.00	24.81						
28	FPK			38000	27.00	30.81						
32	EEB	EJ–1		2750	9.00	12.81						
22		EJO–1	DD									103
38	HMF			9000	15.00	18.88						
29	HNJ			25800	21.00	24.88						
30	HPK			38000	27.00	30.88						

NOTE: DIMENSIONS FOR REFERENCE ONLY

MERSEN

MERSEN USA NEWBURYPORT-MA, LLC
374 MERRIMAC STREET
NEWBURYPORT,MA 01950

TITLE OUTLINE

32B608009

CONT ON SH 2 SH 1

FIRST MADE FOR CPO

Types EJ–1, EJO–1

Replaces 6210344 & 6556756

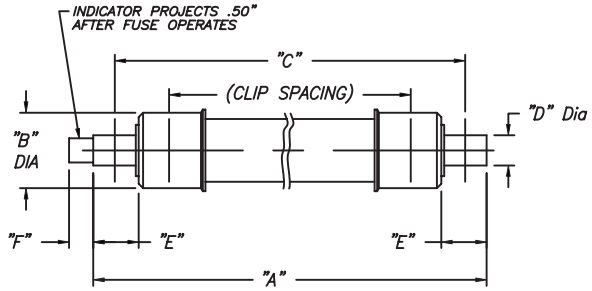

FIG 107

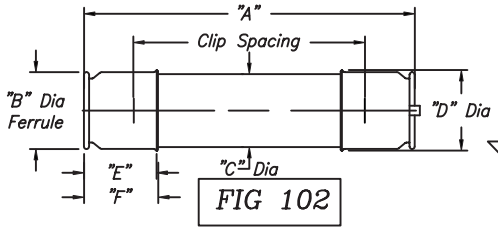

FIG 102

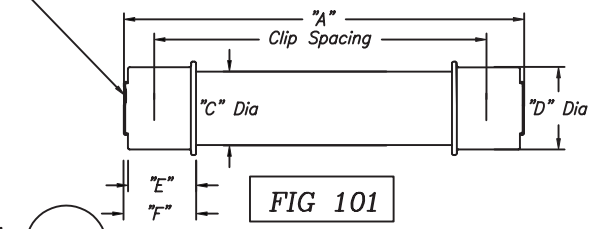

FIG 101

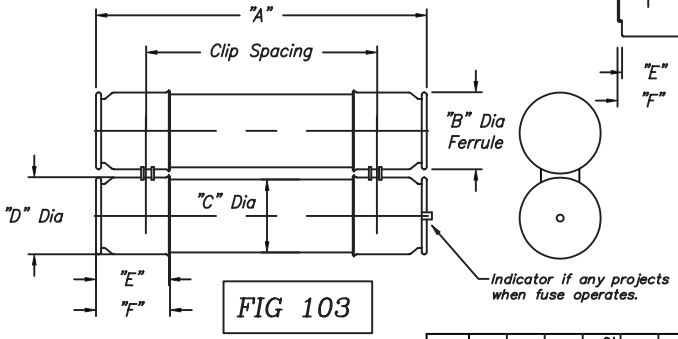

FIG 103

REVISIONS			
25	G. Davis 30–July–91	Retraced w/out Change CHANGE	
26	K. Carroll 12–Oct–95	Converted from Calma Added P40–P42. Added Sh 2	
27	K. Carroll 3–Apr–97	Updated to CPO–outline Format. Old Rev's missing from Orig.	
28	K. Carroll 10–May–97	Added P46 & P47 ECN #K48	
29	K. Carroll 17–Nov–97	Updated Routing ECN #K77	
30	T. Grant 8/29/01	Updated list per ECN#K150 Models obsolete: FJF,FMF QFD/QXD, QGF/QXF	

CPO–V
CPO–WEB
PRINTS TO

MADE BY: J.S. Ryan 12–May–41
ISSUED BY: K. Carroll 17–November–97

APPROVALS
Kris Ranjan 8/31/01

32B608009
CONT ON SH 2 SH 1